Billionaire Lighting Co., Ltd.
Installation Instructions

1

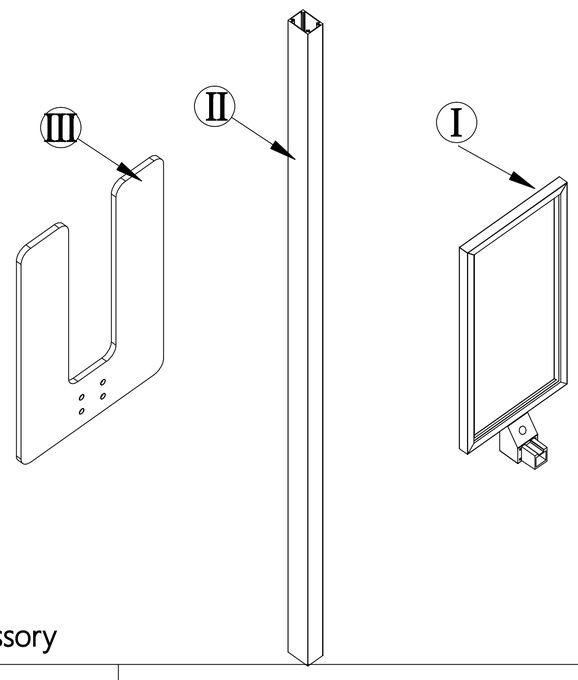

Accessory

Screw A		AX4
Screw B		BX4
Cross point screwdriver		X1
Hexagon screwdriver		X1

2

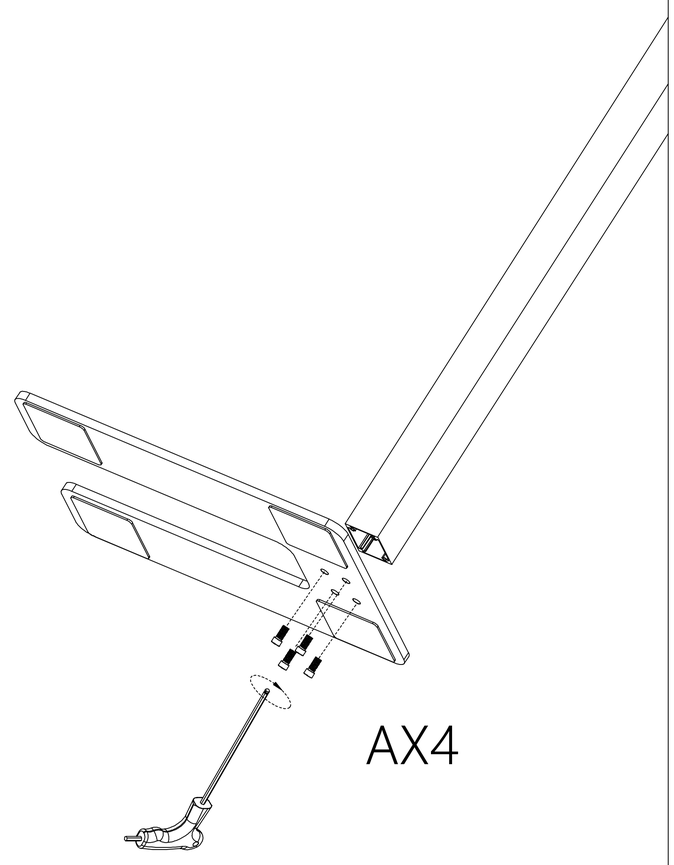

Fix the bottom pole onto base plate

3

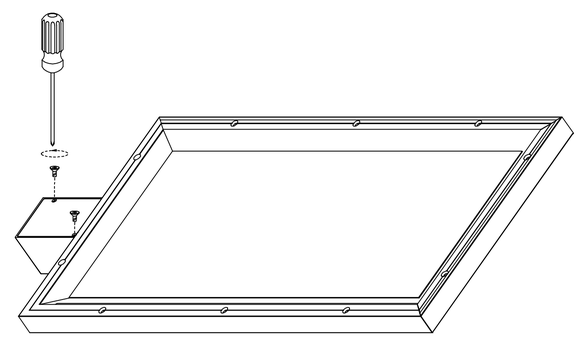

Open the box of lamp body

4

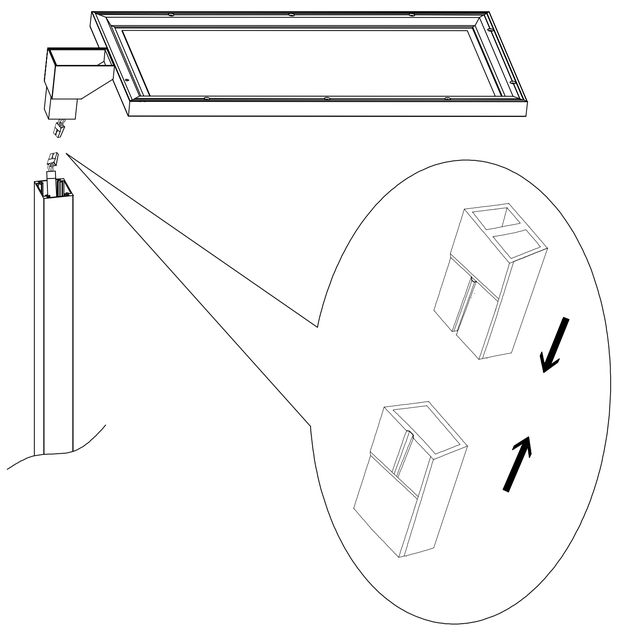

Connect the terminals body

5

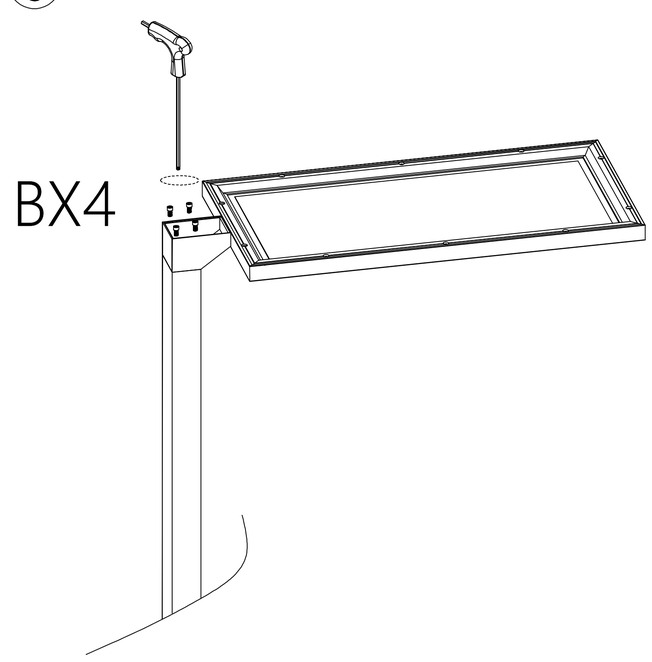

Fix the lamp holder with the B screws

6

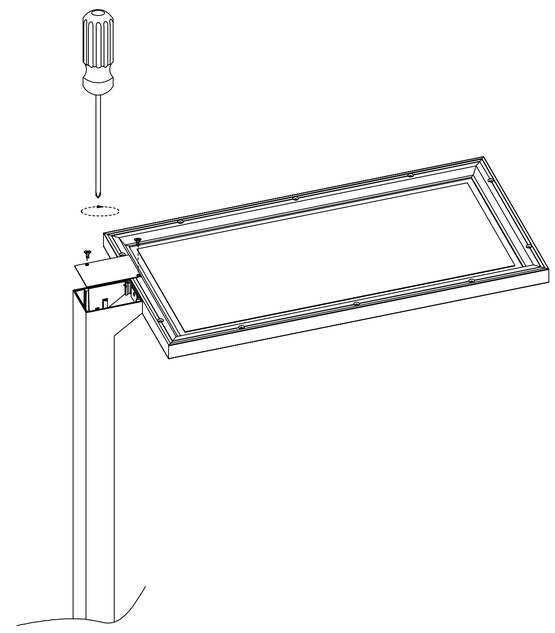

Close the box by screws

7

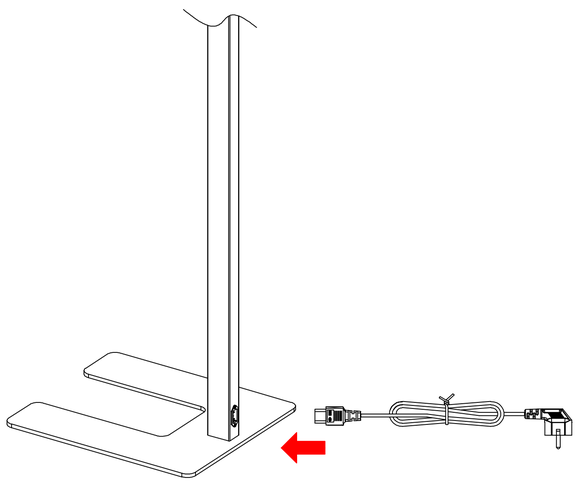

Insert the tail of the AC cable into the terminal seat of lamp pole.
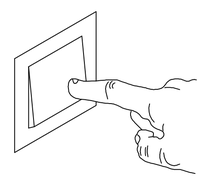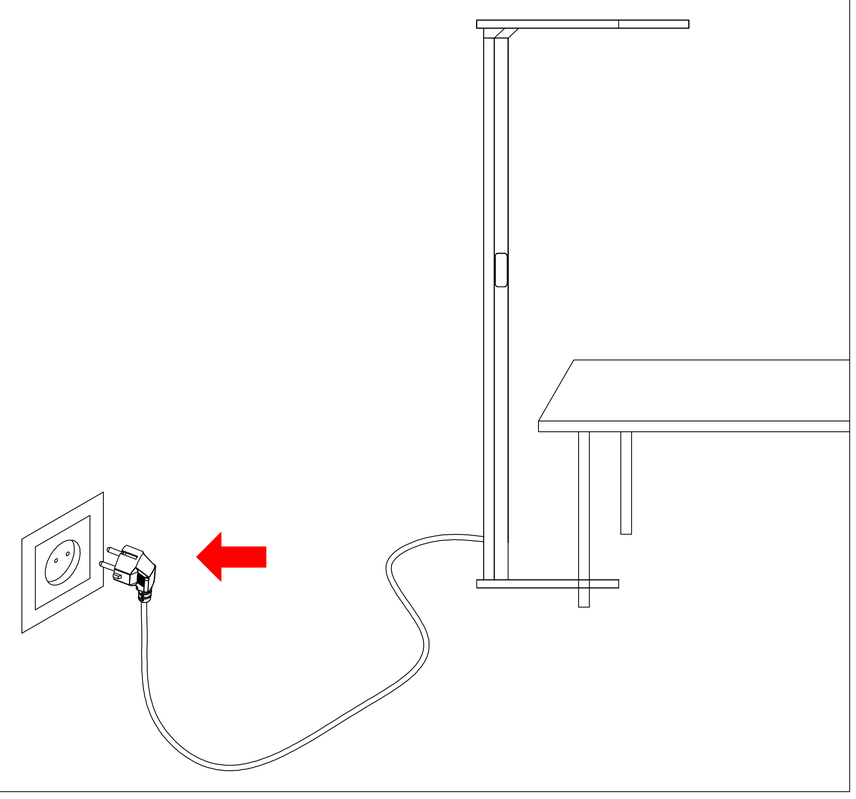
8